Original instructions

Lithium-ion batteries

X-Line / C-Line

Li-Ion TECHNOLOGY

first in intralogistics

50988012301 EN - 06/2023 - 05

Manufacturer and contact details

STILL GmbH
Berzeliusstrasse 10
22113 Hamburg, Germany
Telephone: +49 (0) 40 7339-0
Fax: +49 (0) 40 7339-1622
Email: Info@still.de
Website: www.still.de

1 Foreword

2 Safety

3 Overviews

1

Foreword

Before using the battery

⚠ DANGER

Failure to observe the safety information poses a risk of fatal injury!

Failure to observe the safety information can result in electric shock, burns, serious injury or death.

– Carefully read the operating instructions before using the battery.

The manufacturer accepts no liability for damage caused by not observing these instructions or by improperly or incorrectly using the lithium-ion battery. The battery complies with the essential health and safety requirements of the relevant European directives and the directives applicable in the United Kingdom. The country-specific guidelines and laws must be observed.

Important information about these instructions

Objective of these instructions

These instructions include information necessary for the safe and error-free use of the lithium-ion battery in an industrial truck.

Further information

For further information about using, handling and replacing the battery, refer to the operating instructions of the industrial truck.

Target group for these instructions

These instructions are aimed at all users of the battery.

Structure of these instructions

These instructions do not contain any information regarding service and repair work. Service and repair work must be carried out only by competent persons and in accordance with the service documents.

– Only carry out work on the battery that is described in these instructions.

Storing these instructions

To ensure safe use, these instructions must be accessible to all users.

- Always store these instructions in the vicinity of the battery.
- Notify all battery users of the storage location for these instructions.
- Pass these instructions on to the next owner of the battery.

Intended use

The lithium-ion battery is intended solely for replacing the types of lead battery specified in the manual for the relevant models of industrial truck. Any other use is improper use.

The battery corresponds to the latest technological standards and recognised safety regulations. However, if the battery is used in a way other than the intended use, dangerous situations may arise.

The battery must be used only in accordance with the following documents:

- These operating instructions for the battery
- Operating instructions for the industrial truck
- Operating instructions for the battery charger

Use and charge the battery only when it is in good working order:

- The battery must be undamaged and functional
- The cables to the battery charger must not be damaged
- The cables to the industrial truck must not be damaged

Use the battery only in industrial trucks designed for this purpose with the operating voltage indicated on the identification plate.

Charge the battery only with battery chargers approved by the manufacturer.

Use the battery (X-Line / C-Line) only in accordance with the approved ambient conditions, see the chapter entitled "Ambient conditions".

⚠ CAUTION

Reduced service life due to discharged cells.

The service life of the battery will be reduced if the charge state of the battery falls below 10% for an extended period of time.

– If the current charge state is less than 10%, charge the battery as soon as possible.

– Only take the battery out of operation for a prolonged period if it is fully charged. Recharge the battery after three months.

Dangerous incorrect use

Improper handling can cause an explosion or start a fire!

- Never use the battery in areas where there is a risk of fire or a **risk of explosion**.
- Do not climb on the battery.
- Use the battery (X-Line / C-Line) only in accordance with the approved ambient conditions, see the chapter entitled "Ambient conditions".

Opened, destroyed or damaged batteries

Opening or intentionally damaging the battery can cause serious injuries.

- Do not dismantle, open or break up the battery.
- Do not disassemble, bridge or bypass the safety systems.
- Do not screw or solder anything to the battery or otherwise change the battery in any way.
- Do not pierce, drop or crush the battery.
- Never touch damaged batteries with your bare hands. Lithium can cause serious burns to the skin.
- Do not continue using a battery if it is unusually warm, is producing an odour, is discoloured or is deformed.

The battery contains electrical and mechanical components that are essential for preventing hazards. Opening the battery invalidates the warranty.

Heat

- Never expose the battery to temperatures of over 60 C or an open flame.

External heat can cause the battery to explode.

Fluid

The ingress of liquids can cause short circuits and fire.

- Protect the battery from fluids and humidity.

Short circuit

A short circuit can destroy the battery and start a fire.

- Do not short circuit the battery.
- Keep the contacts away from metallic objects.

Misuse

Misuse can destroy the battery and result in personal injury or property damage. Improper use includes using the battery in an industrial truck that has not been approved for this purpose. In this scenario, the safety systems present in the battery cannot function as intended and perform actions such as shutting off the battery in a dangerous situation. Other examples of improper or incorrect use include:

- Failure to observe the temperature limits
- Charging the battery using a different battery charger to the one approved by the manufacturer
- Making changes to the battery
- Allowing an unqualified person to repair the battery
- Repairing the battery with components not approved by the manufacturer
- Allowing people who are not familiar with how to handle the battery and/or who do not understand the hazards involved to operate or maintain the battery

Product-specific dangers

All lithium-ion batteries are safe when used for their intended purpose.

If the batteries are used properly, no hazardous substances escape from the closed tray. No contact with toxic substances is possible. There is a risk of contact only in the event of incorrect use (mechanical, thermal, electrical) that leads to activation of the safety valves or to the housing cracking.

If not handled properly, liquid electrolyte may escape or electrode materials may react with humidity/water. The battery may vent and cause a fire or explosion.

Touching live components can cause an electric shock, which can cause burns or paralysis.

The latter can cause ventricular fibrillation, cardiac arrest or respiratory paralysis, leading to death.

Improper handling can arc faults and subsequently lead to burns.

If a battery combusts, the resulting smoke or vapours can cause irritation of the eyes, skin and respiratory system.

Compliance Information for lithium-ion batteries

CE conformity

Compliance information for lithium-ion batteries. The manufacturer of the lithium-ion battery and supplier of the KION Group declares that: The lithium-ion battery complies with the latest versions of the 2006/66/EC Battery Directive, the 2006/42/EC Machinery Directive, the 2014/30/EU EMC Directive and, if applicable, the Low Voltage Directive 2014/35/EU. This declaration of conformity with the EU directives applies only to use of the battery as recommended in these operating instructions.

UKCA compliance

Compliance information for lithium-ion batteries. The manufacturer of the lithium-ion battery and supplier of the KION Group declares that: The lithium-ion battery complies with the latest versions of the "Regulation for Supply of Machinery (Safety) Regulations 2008", "Regulations for Batteries and Accumulators (Placing on the Market) Regulations 2008", "Electromagnetic Compatibility Regulations 2016", and, if applicable, the "Regulations for Electrical Equipment (Safety) Regulations 2016". This declaration of conformity with the UKCA directives applies only to use of the battery as recommended in these operating instructions.

Explanation of signal terms used

⚠ DANGER

Indicates procedures that must be strictly adhered to in order to prevent the risk of fatalities.

⚠ WARNING

Indicates procedures that must be strictly adhered to in order to prevent the risk of injuries.

⚠ CAUTION

Indicates procedures that must be strictly adhered to in order to prevent material damage and/or destruction.

NOTE

For technical requirements that require special attention.

ENVIRONMENT NOTE

To prevent environmental damage.

Explanation of signs and symbols

General danger sign ▷

Danger of electric shock ▷

Warning of hot surface ▷

Not to be maintained by the user ▷ 

Do not climb ▷ 

Do not lift using a triangle cable guide ▷ 

Use a lifting traverse ▷ 

Do not burn the battery ▷ 

Do not stack batteries ▷ 

Do not immerse the battery in fluid ▷ 

Observe instructions ▷ 

Use air-supplied respiratory protection ▷ 

The battery contains harmful substances. Do not dispose of the battery in household waste ▷ 

The product contains recyclable materials ▷ 

User qualifications

The battery must only be used by adults. Users must not have any physical or mental disabilities that reduce their capacity to recognise hazards and to intervene in dangerous situations.

To use the battery in the industrial truck, the user must have the following qualifications: user training from the operating company based on these operating instructions.

Persons with medical implants

For technical reasons, the electric cables emit electromagnetic (non-ionising) radiation. This radiation could affect users who have medical implants, such as pacemakers or defibrillators.

⚠ CAUTION

Electromagnetic interference may occur on medical devices!

- Only use devices that are sufficiently protected against electromagnetic interference.
- The functionality of some medical equipment, for example pacemakers or hearing aids, may be impaired when the battery is in operation.
- Ask your doctor or the manufacturer of the medical device to confirm that the medical device is sufficiently protected against electromagnetic interference.

Danger area

⚠ WARNING

Risk of burns due to hot surfaces!

- Do not touch the hot area on the surface of the battery. The position of the hot area depends on the battery model.

X-Line

The temperature of the brake resistor in the battery can rise to over 100°C during operation. The surface of the battery in this area can also become very hot. It can take several hours for the components to cool down to a temperature at which they pose no risk.

– For the location of the hot area, refer to the chapter entitled "Overview" for the relevant battery group.

C-Line

During normal use, the outside of the battery does not become hot.

Ambient conditions

The ambient conditions in which the battery groups may be operated are different.

- If you have any questions regarding the permitted ambient conditions for using the battery, contact the authorised service centre.
- Observe the instructions for using the battery in the operating instructions of the industrial truck.

X-Line	
Permissible temperature ranges (operation, charging, storage)	See the chapter entitled "Technical data" for the relevant battery group.
Moisture/humidity	Protection class rating IP6K9K The battery can be used both outside and in buildings.
Air humidity	0% - 100%
Storage conditions	See the chapter entitled "Storage conditions".
Cold store suitability	See temperature ranges in the chapter entitled "Technical data" for the respective battery group.
Areas where there is a risk of fire or explosion	No
Altitude	Use is possible up to a height of 2000 m.

C-Line	
Permissible temperature ranges (operation, charging, storage)	See the chapter entitled "Technical data" for the relevant battery group.
Moisture/humidity	Protection class: IP54 The battery may be used only in buildings or areas protected from the weather. The battery must not be used in areas exposed to rain, fog or steam.
Air humidity	5% - 85%
Cold store suitability	No
Storage conditions	See the chapter entitled "Storage conditions".
Areas where there is a risk of fire or explosion	No
Altitude	Use is possible up to a height of 2000 m.

Identifying the battery

Nameplate

The individual battery is identified by the serial number (9).

The battery type can be identified using the "Installed energy" (11) information or the battery group (see chapter entitled "Battery-Part-Number (B-P/N)").

Overview

1 Manufacturer
2 Technology
3 Transport information
4 General operating notes
5 CE symbol
6 Data matrix code for the authorised service centre
7 UKCA symbol
8 Safety information
9 Seriennummer
10 B-P/N (Battery-Part-Number)
11 Energy used (kWh)
12 Data/technical data
13 Address of manufacturer

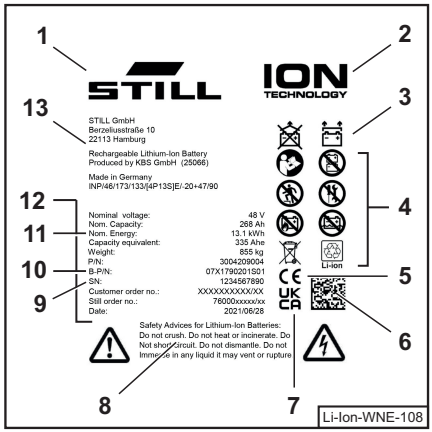

Battery-Part-Number (B-P/N)

The B-P/N (Battery-Part-Number) is indicated on the battery nameplate.

Your identification key shows the battery group (4) and other information.

Identification key

1 Year of production
2 Variant
3 Day of production
4 Battery group
5 Distributor
6 Sequential number

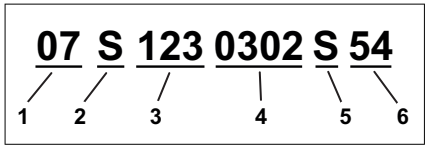

Breakdown of the identification key

Year of production	
01	2015
02	2016
03	2017
04	2018
05	2019
ff.	

Variant	
S	Series
A	A sample
B	B sample
C	C sample
P	Pre-series

Day of production

Sequential number of the days of production

Battery group	
0101	= 1.1
0402	= 4.2
ff.	

The first two digits indicate the battery group.
The next two digits indicate the sub-group.

Distributor	
S	STILL

Sequential number

Daily counter of batteries produced during the day

Explanation using the example: **03S1990402S01**

03	Manufactured in 2017
S	Series
199	Day 199 of 2017
0402	Battery group 4.2
S	Produced for STILL
01	Production number 01 of battery group 4.2 on day 199

2

Safety

Battery management system and safety

The battery has the following protective devices:

- Automatic on/off
- Cell balancing
- High current protection and short circuit protection
- Deep discharge protection
- Protection against incorrect charging
- Protection against polarity reversal
- Voltage monitoring for each cell
- Circuit break devices in each module
- Safety valve on each cell (X-Line only)
- Cell temperature monitoring
- Temperature monitoring for the battery electronics

Information in the event of emergency

Firefighting instructions

⚠ DANGER

Risk of poisoning due to vapours

Inhaling vapours may cause poisoning.

– Call the fire brigade.
– Position yourself on the side of the fire from which the wind is blowing.
– Use air-supplied respiratory protection.

– Use a fire extinguisher of fire class A/B/C plus water or sand to fight a fire.
– Do not inhale toxic fumes.

Battery is becoming disproportionately hot and reporting an error

X-Line

If the battery displays an error and becomes disproportionately hot (over 80°C):

- Contact the authorised service centre immediately; refer to the firefighting information.
- Stop operating the industrial truck.
- Cool down the outside of the tray using water.
- The build-up of heat in the area around the brake resistor is harmless.

C-Line

If the battery displays an error and becomes disproportionately hot (over 60°C):

- Contact the authorised service centre immediately; refer to the firefighting information.
- Stop operating the industrial truck.
- Cool down the outside of the tray using water.

Gas escaping from the battery

⚠ DANGER

Risk of poisoning due to vapours

Inhaling vapours may cause poisoning.

- Call the fire brigade.
- Position yourself on the side of the fire from which the wind is blowing.
- Use air-supplied respiratory protection.

- Contact the authorised service centre immediately.

First-aid measures

Course of action required if gases or liquids escape

Inhalation

Escaping gases can lead to breathing difficulties.

– Ventilate the area immediately or seek fresh air.

– Always contact a doctor.

Skin contact

Skin irritation can occur in the event of contact with the skin.

– Thoroughly wash the skin with soap and water.

– Always contact a doctor.

Eye contact

Eye irritation can occur in the event of contact with the eyes.

– Immediately wash the eyes thoroughly with water for 15 minutes.

– Always contact a doctor.

Measures required in the event of electric shock

– Perform first aid. Call a doctor or seek medical attention.

3

Overviews

Battery group 1

X-Line

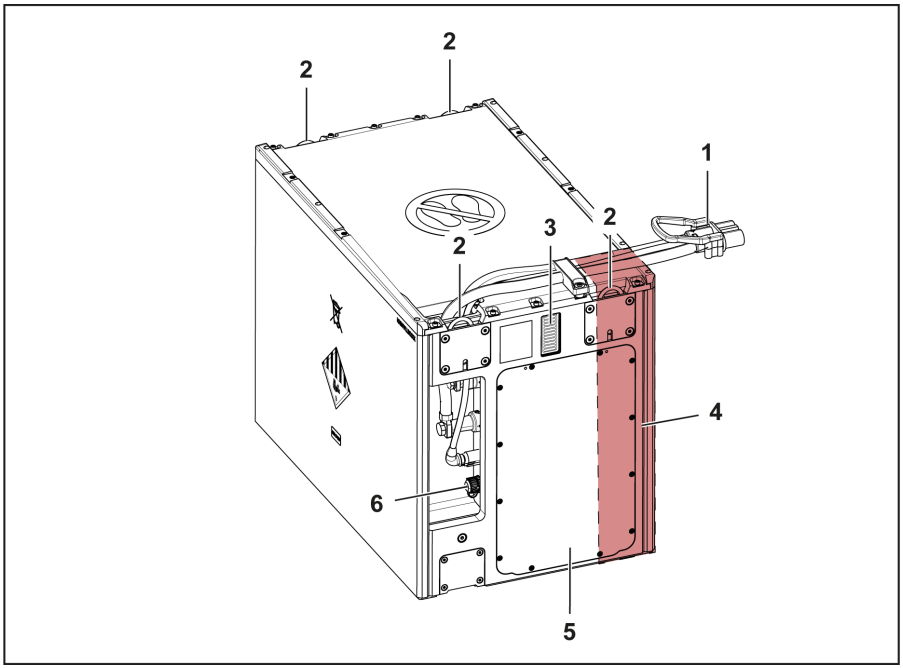

1 Battery male connector
2 Lifting eye
3 Display
4 ⚠ Area which could be heated by the brake resistor
5 Technology compartment
6 Diagnostic connector

C-Line

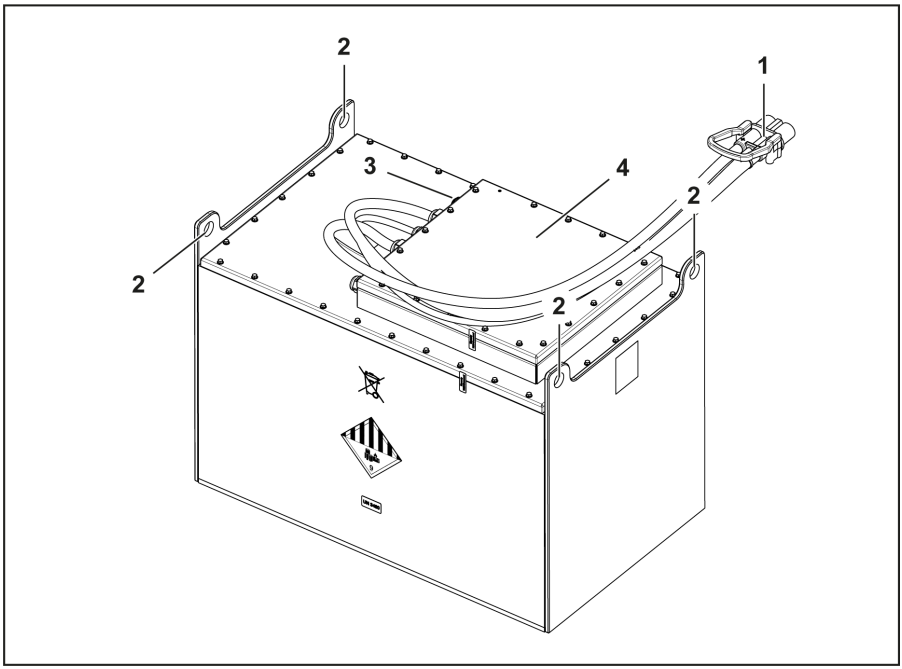

1	Battery male connector *	3	Diagnostic connector
2	Lifting eye	4	Technology compartment

Battery group 2

X-Line 2.x

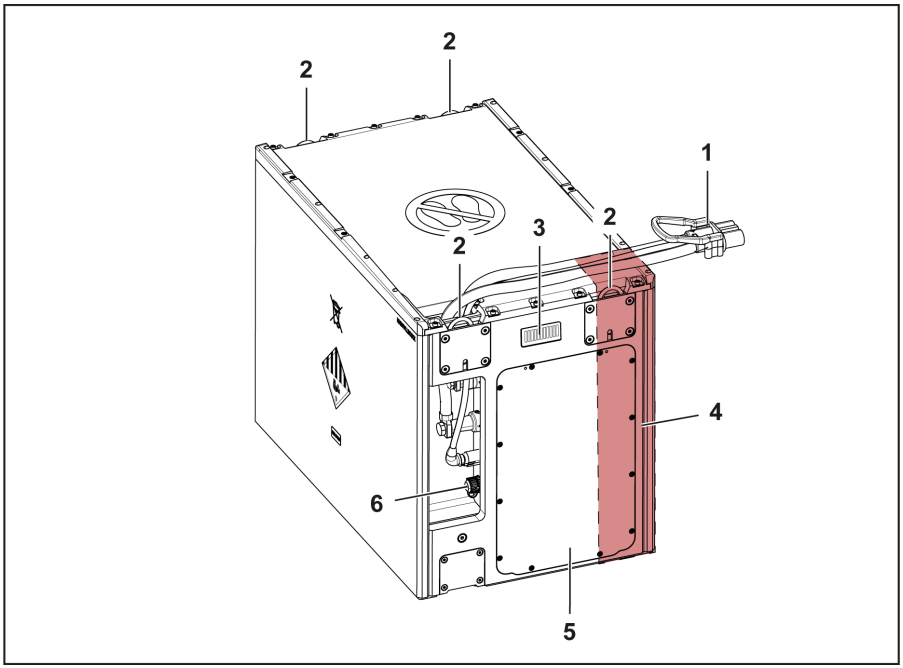

1	Battery male connector	5	Technology compartment
2	Lifting eye	6	Diagnostic connector
3	Display		
4	⚠ Area which could be heated by the brake resistor		

X-Line (nur 2.1)

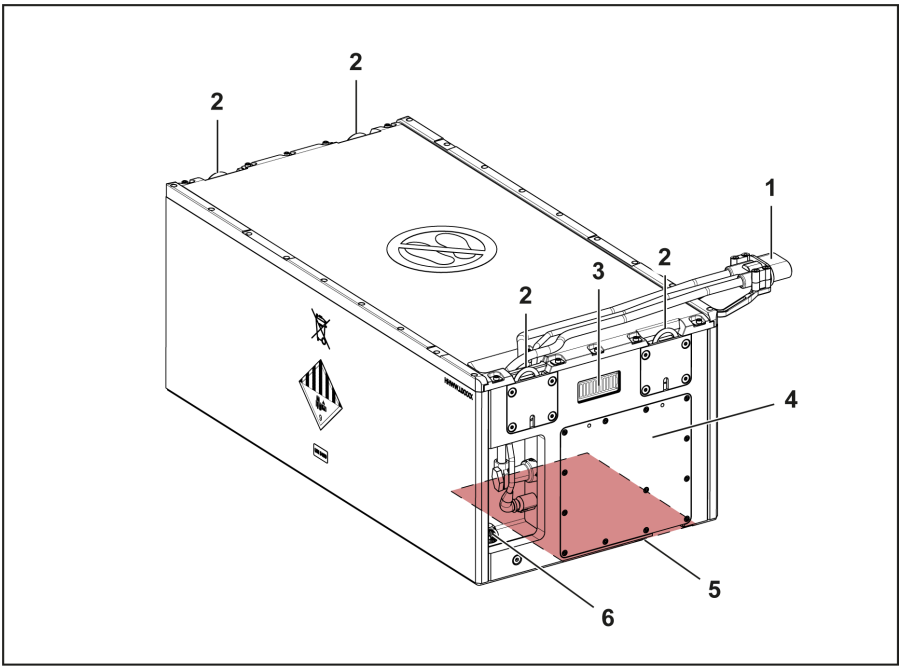

1	Battery male connector	5	⚠ Area which could be heated by the brake resistor
2	Lifting eye	6	Diagnostic connector
3	Display		
4	Technology compartment		

C-Line

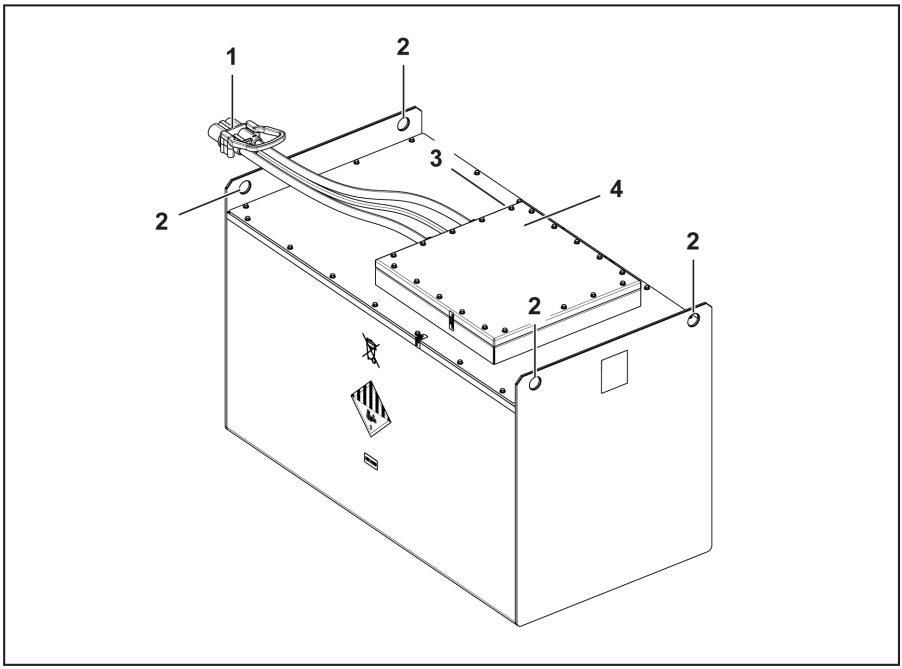

1	Battery male connector	3	Diagnostic connector
2	Lifting eye	4	Technology compartment

Battery group 3

X-Line 3.x

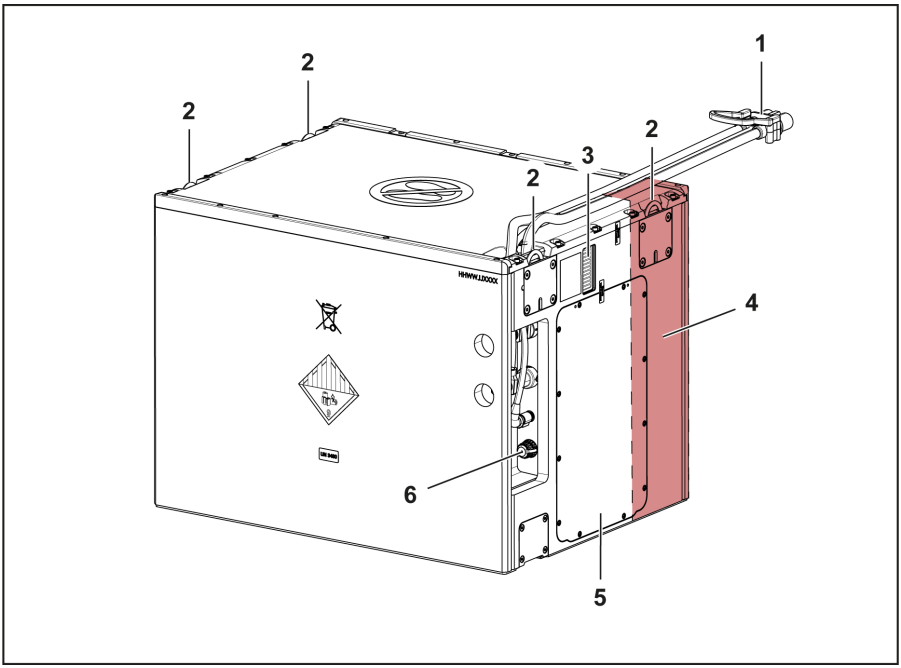

1	Battery male connector	5	Technology compartment
2	Lifting eye	6	Diagnostic connector
3	Display		
4	⚠ Area which could be heated by the brake resistor		

X-Line (only 3.1, 3.2, 3.3)

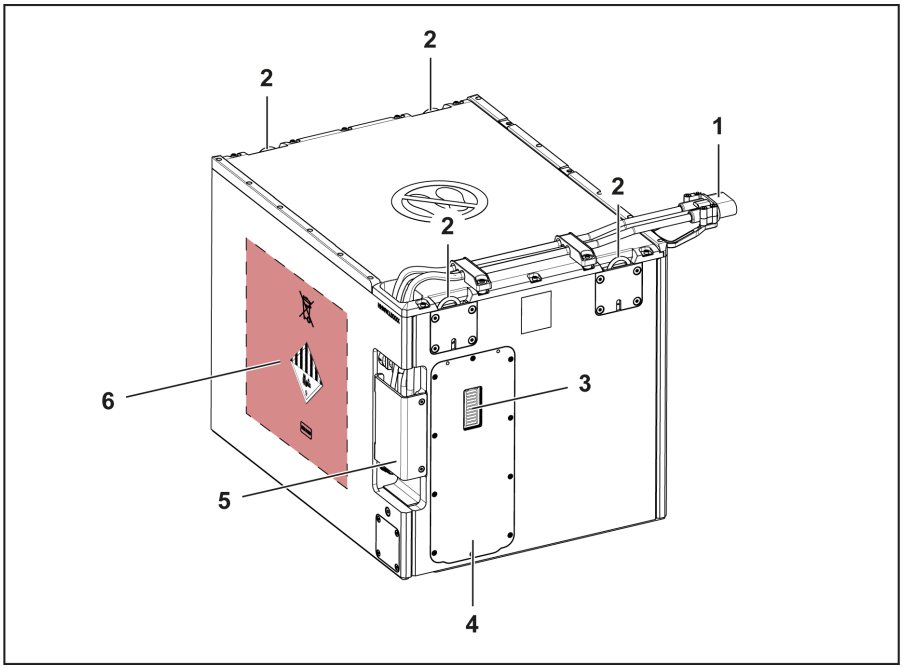

1	Battery male connector *	5	Diagnostic connector
2	Lifting eye	6	⚠ Area which could be heated by the brake resistor
3	Display		
4	Technology compartment		

C-Line

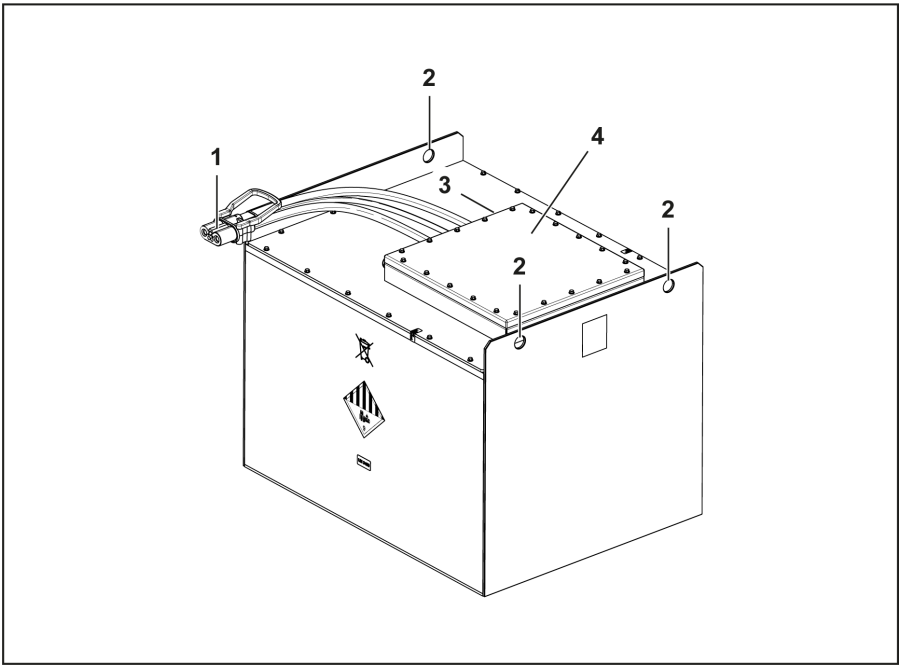

1	Battery male connector	3	Diagnostic connector
2	Lifting eye	4	Technology compartment

Battery group 4

X-Line 4.x

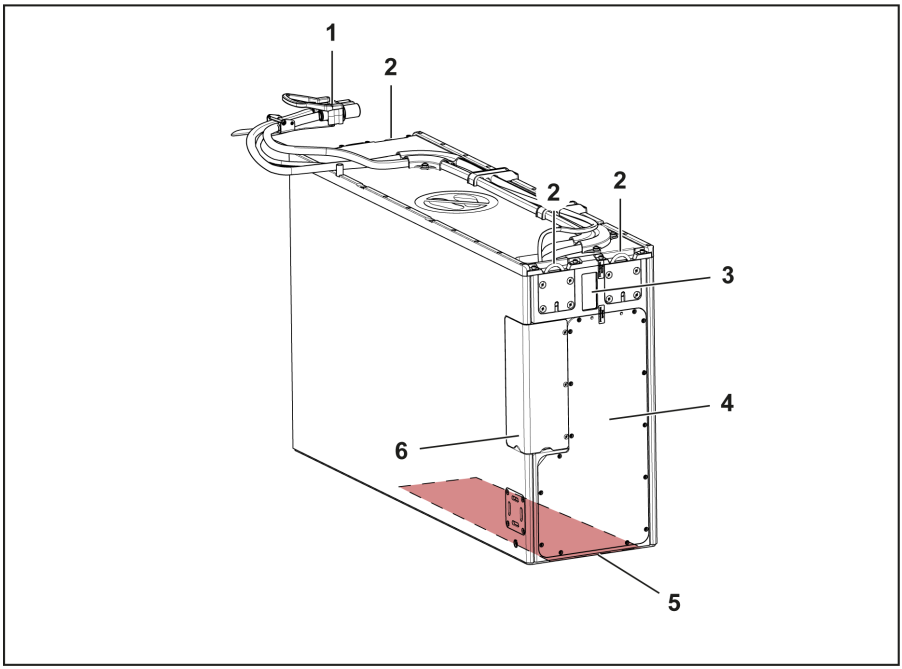

1	Battery male connector	5	⚠ Area which could be heated by the brake resistor
2	Lifting eye	6	Diagnostic connector
3	Display		
4	Technology compartment		

X-Line (nur 4.1)

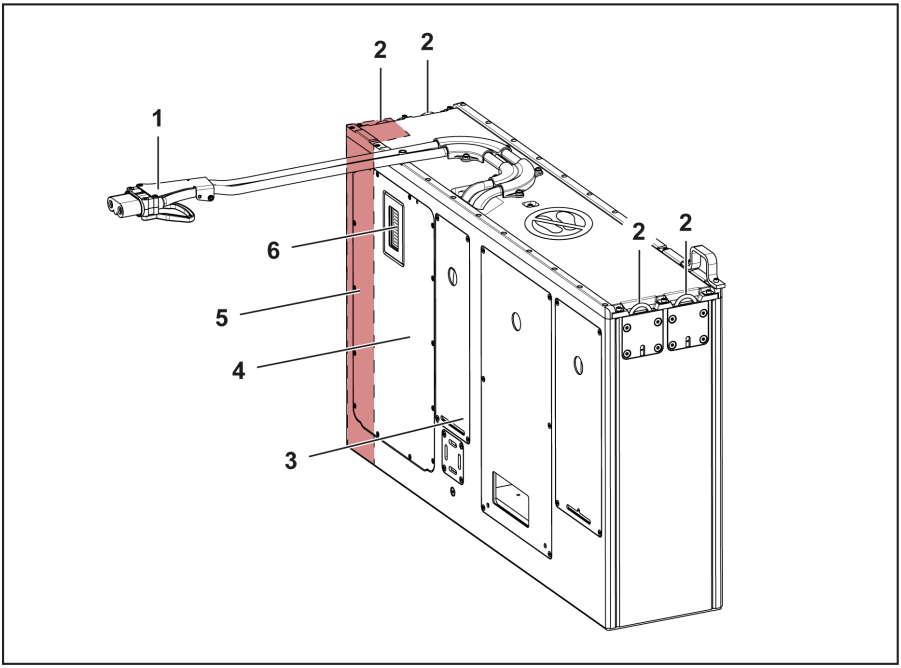

1	Battery male connector	5	⚠ Area which could be heated by the brake resistor
2	Lifting eye	6	Display
3	Diagnostic connector		
4	Technology compartment		

Battery group 5

X-Line

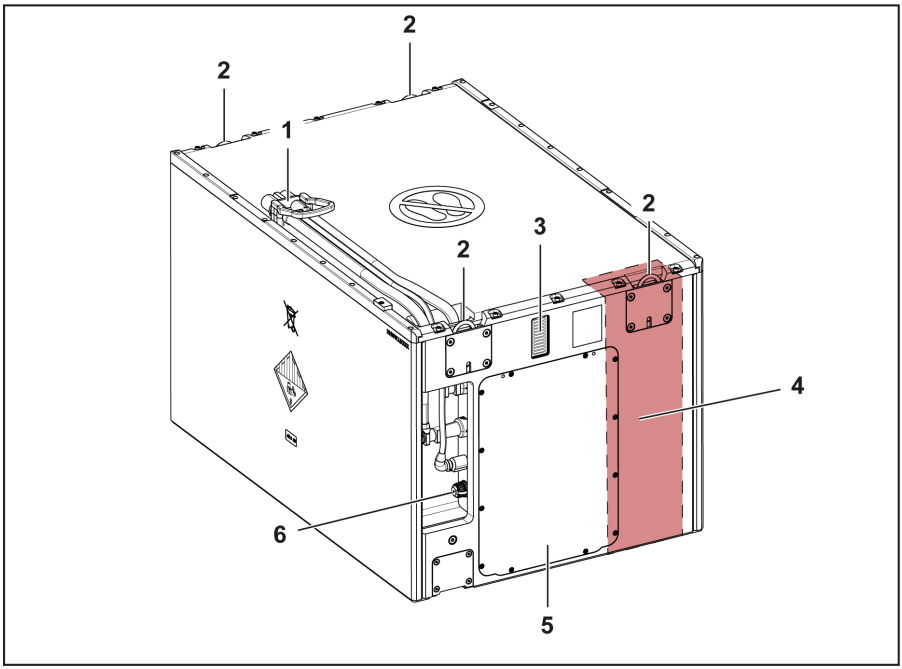

1	Battery male connector	5	Technology compartment
2	Lifting eye	6	Diagnostic connector
3	Display		
4	⚠ Area which could be heated by the brake resistor		

Battery group 6

X-Line

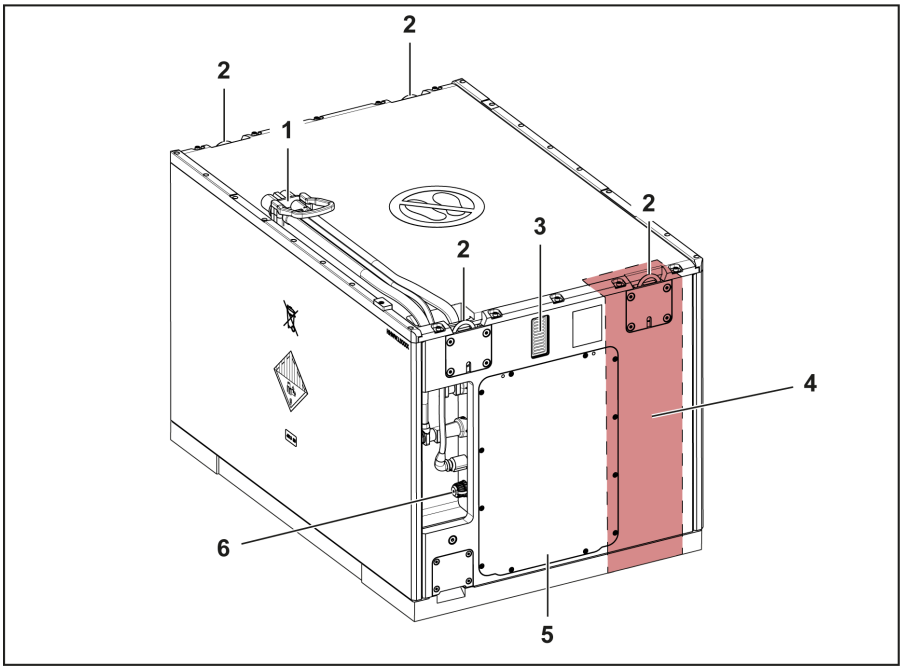

1	Battery male connector	5	Technology compartment
2	Lifting eye	6	Diagnostic connector
3	Display		
4	⚠ Area which could be heated by the brake resistor		

Battery group 7

X-Line

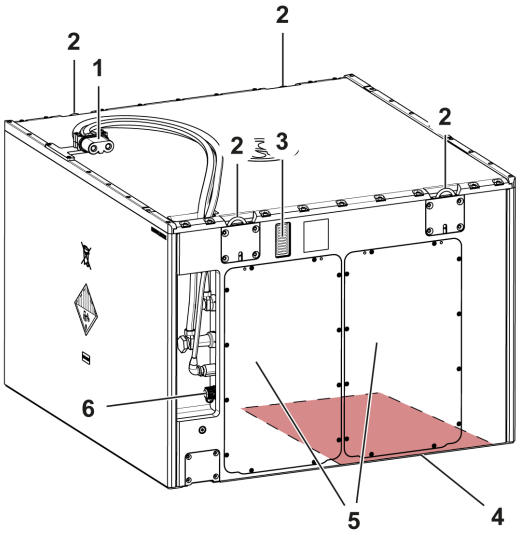

1	Battery male connector	5	Technology compartment
2	Lifting eye	6	Diagnostic connector
3	Display		
4	⚠ Area which could be heated by the brake resistor		

Battery group 8

X-Line

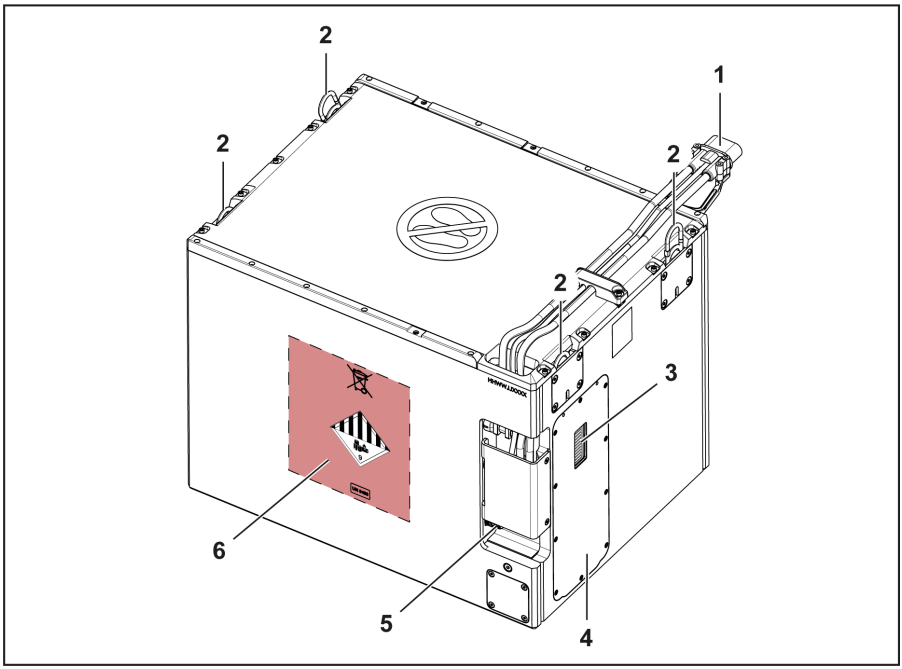

1	Battery male connector	5	Diagnostic connector
2	Lifting eye	6	⚠ Area which could be heated by the brake resistor
3	Display		
4	Technology compartment		

Battery group 9

X-Line

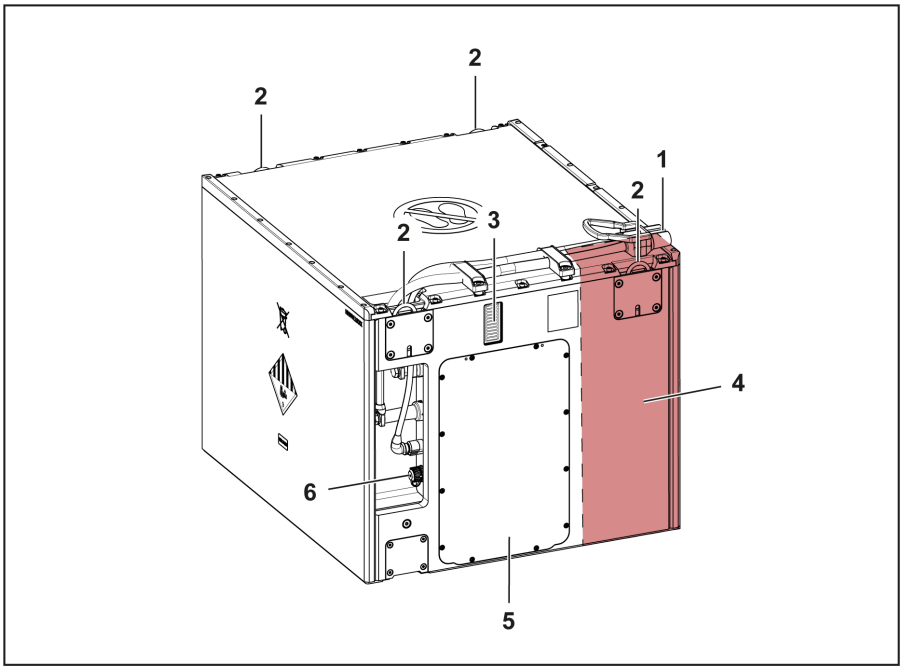

1	Battery male connector	5	Technology compartment
2	Lifting eye	6	Diagnostic connector
3	Display		
4	⚠ Area which could be heated by the brake resistor		

Battery group 10

X-Line

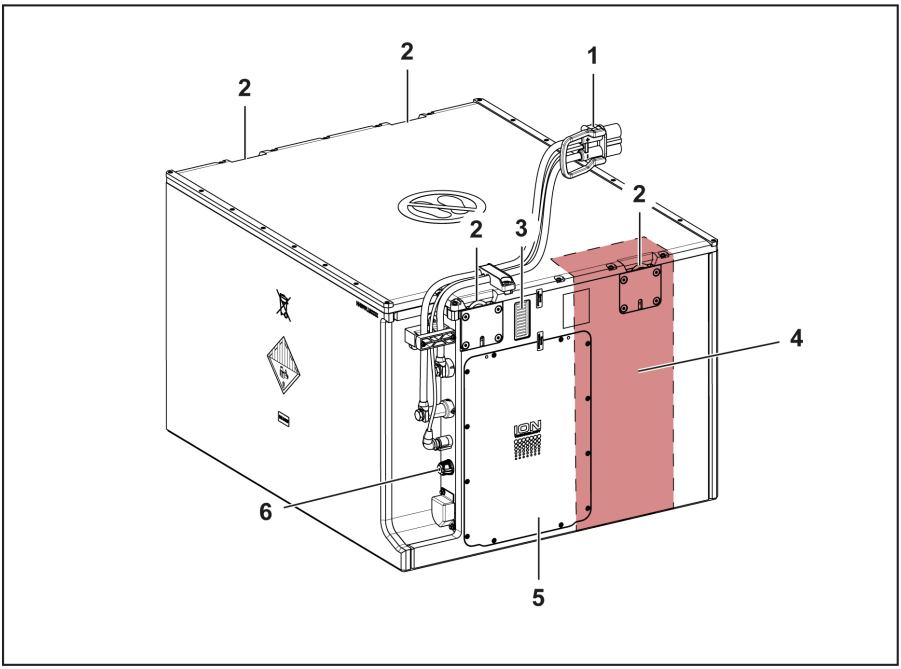

1	Battery male connector	5	Technology compartment
2	Lifting eye	6	Diagnostic connector
3	Display		
4	⚠ Area which could be heated by the brake resistor		

Battery group 11

X-Line

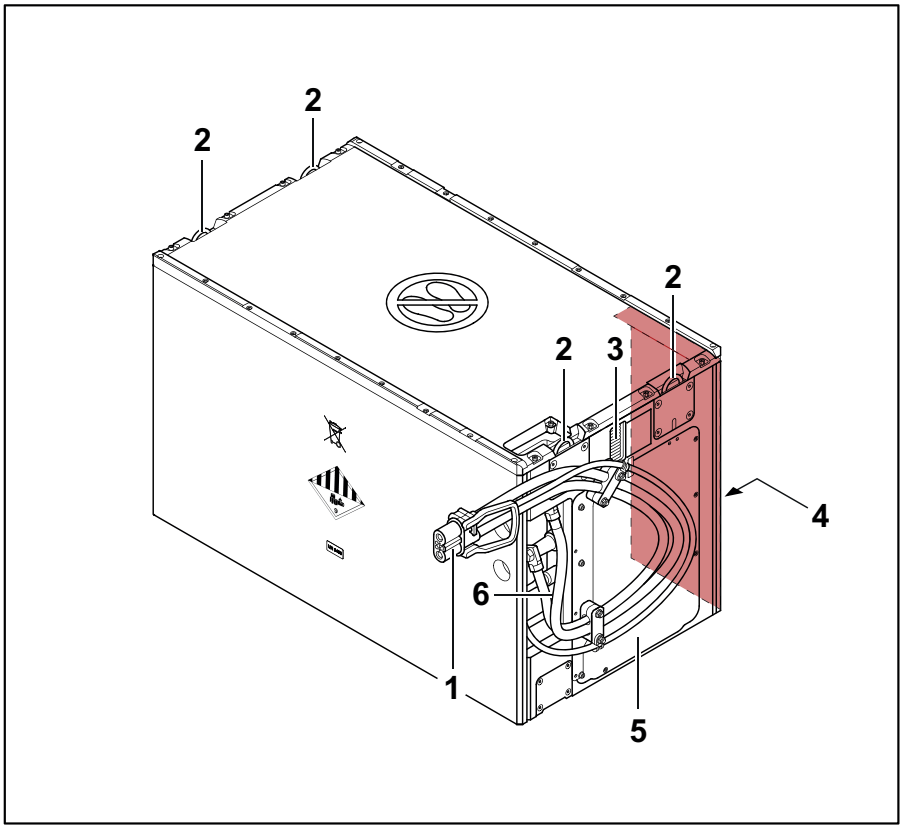

1	Battery male connector	5	Technology compartment
2	Lifting eye	6	Diagnostic connector
3	Display		
4	⚠ Area which could be heated by the brake resistor		

Battery group 13

X-Line

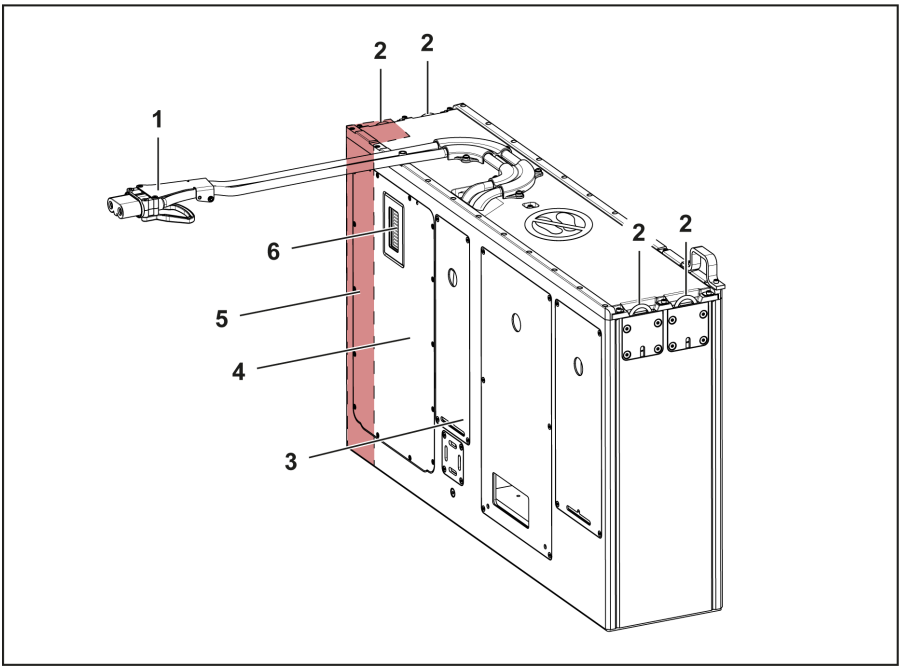

1	Battery male connector	5	⚠ Area which could be heated by the brake resistor
2	Lifting eye	6	Display
3	Diagnostic connector		
4	Technology compartment		

Battery group 14

X-Line

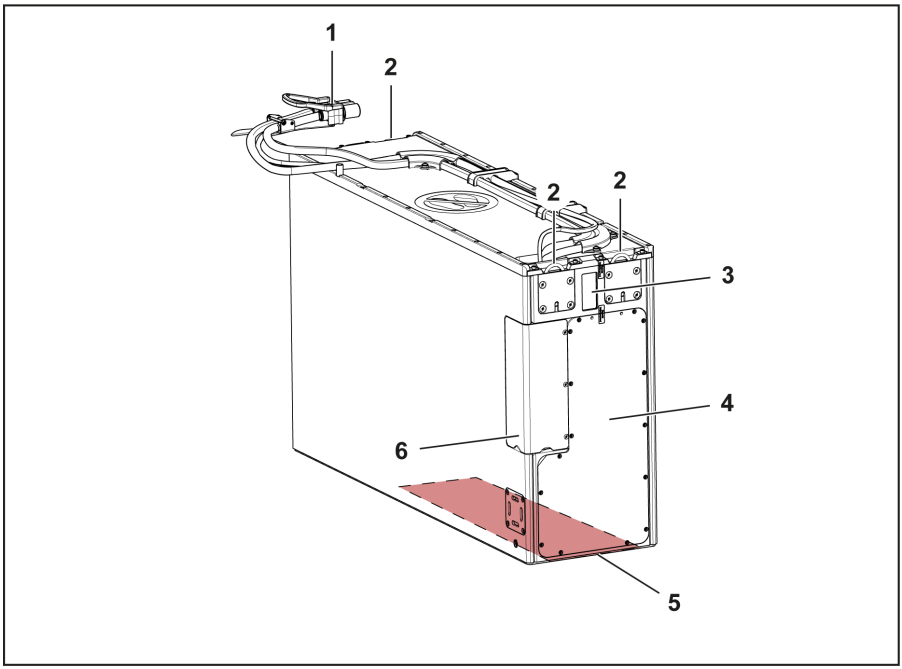

1	Battery male connector	5	⚠ Area which could be heated by the brake resistor
2	Lifting eye	6	Diagnostic connector
3	Display		
4	Technology compartment		

C-Line

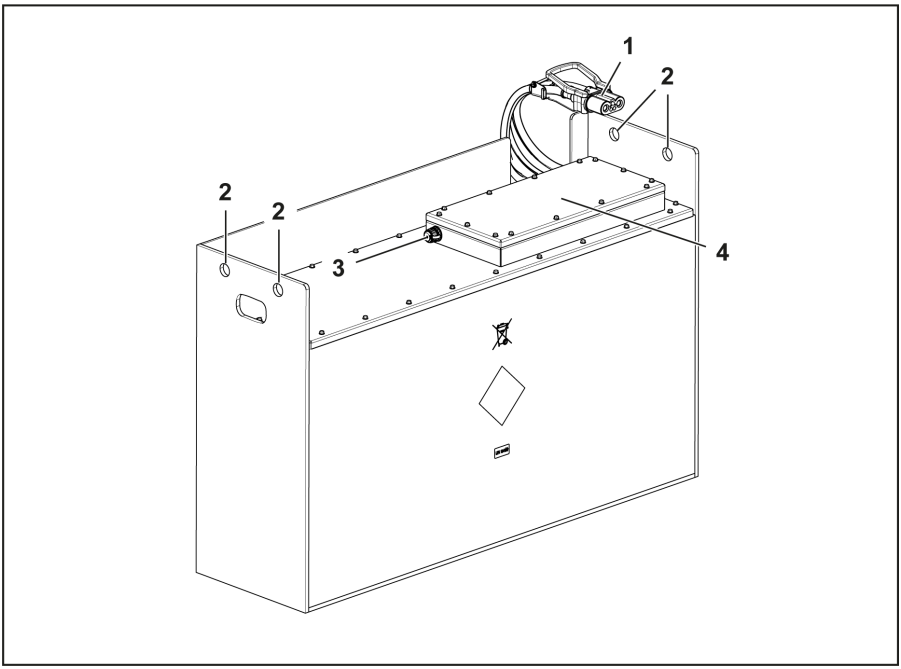

1	Battery male connector	3	Diagnostic connector
2	Lifting eye	4	Technology compartment

Battery group 15

X-Line

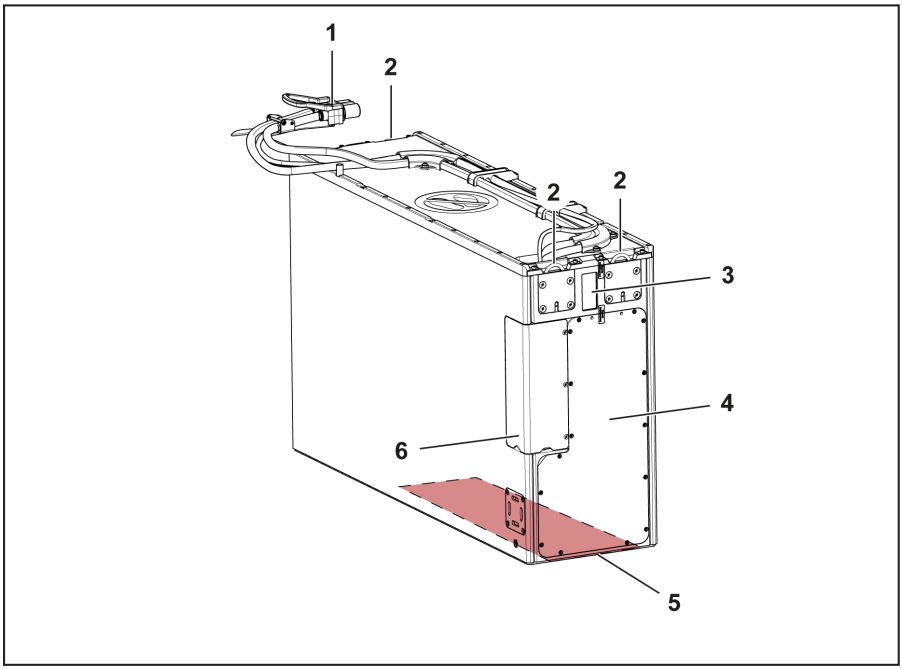

1	Battery male connector	5	⚠ Area which could be heated by the brake resistor
2	Lifting eye	6	Diagnostic connector
3	Display		
4	Technology compartment		

4

Operation

Description of the battery

The lithium-ion battery is an electrochemical energy storage device for powering industrial trucks.

The battery is only functional once installed in the relevant industrial truck model or once connected to a corresponding lithium-ion battery charger.

The industrial truck must be designed for operation with the lithium-ion battery.

The industrial truck relies on the weight of the battery to guarantee the stability required for operation.

Safety information

Safety when charging

– Observe the operating instructions for the battery charger.

– Charge the battery only with a battery charger approved by the industrial truck manufacturer.

Contact the authorised service centre for information about approved battery chargers.

– Only charge the battery within the permissible temperature range; see temperature ranges in the chapter entitled "Technical data" for the respective battery group.

Safety during operation

– Observe the operating instructions provided by the industrial truck manufacturer.

– Only operate the battery in the permissible temperature range; see temperature ranges in the chapter entitled "Technical data" for the respective battery group.

Condition of the battery on delivery

The battery is supplied complete with the battery cables installed.

The battery has been de-energised by the manufacturer for transportation purposes. There is no voltage at the battery terminals and the battery male connector.

When connected to the truck or a battery charger, the battery switches to the operating status.

Fully charge the battery before using it for the first time.

Connecting the battery to the industrial truck

Observe the original operating instructions of the industrial truck.

Switching on the battery

The battery switches on automatically (operating status) when it receives a signal from the industrial truck or from the battery charger.

The battery cannot be switched on manually.

Modes of operation

The user cannot set any operating modes directly on the battery.

Normal operation

"Normal operation" is used to refer to modes of operation such as drive mode, charging mode and the quiescent state.

Drive mode

In drive mode, the charge state of the battery is indicated on the display of the truck.

Charging mode

In charging mode, the charging state of the battery is indicated on the display of the battery charger.

Quiescent state

If the battery is not in use, the battery switches to a quiescent state in order to keep self-discharge to a minimum.

Switching on the battery

The battery is switched on via a signal from the industrial truck or the battery charger.

Emergency operation

Medium-severity fault

If a medium-severity fault is detected, the battery switches to emergency operation. Battery power is limited.

The battery must be reset by switching the industrial truck off and on again.

Reversible malfunction

Severe fault

If a severe fault occurs, the battery gives the industrial truck a command to brake. After five seconds, the battery reports a malfunction.

The battery must be reset by switching the industrial truck off and on again. A waiting period determined by the fault in question must elapse before resetting the battery.

Irreversible malfunction

Severe fault

In the event of a severe fault, the battery shuts down immediately and can no longer be used.

The battery must be repaired by an authorised service centre.

Charging the battery

Battery capacities

The capacity (kWh) specified for the batteries is the minimum level. The actual capacity of the battery may be higher. Depending on this higher capacity, batteries of the same battery group may have different run times and charging times.

NOTE

Batteries with increased capacity have the same charging indicators but take longer to become fully charged.

- *This does not affect the charging performance.*

Displaying the charge state

(X-Line)

X-Line batteries have their own display that shows information about the condition of the battery. The display is located on the side of the battery tray.

The signals from the display are described in the operating instructions of the industrial truck.

The charge state is indicated on the display in both drive mode and charging mode.

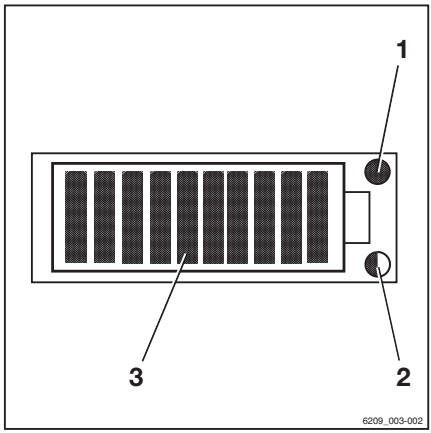

1 Service LED (red)
2 Temperature LED (yellow/red)
3 Charging state LEDs (red/green)

Service LED

The service LED (1) lights up red if the battery function is significantly restricted or if operation is not possible.

Temperature LED

The temperature LED (2) indicates an increased temperature. Battery power is reduced.

Charging state LEDs

The charge state LEDs (3) indicate the battery charge state when the battery is connected to

the industrial truck and the industrial truck is switched on.

NOTE

If the charge state is less than 10%, charge the battery.

Charging the battery

The battery can be charged either when installed in an industrial truck or separately if removed from the industrial truck.

– Follow the instructions in the operating instructions for the battery charger.

Batteries in some battery groups must be fully charged once per week. This is necessary to ensure that the charge state is displayed correctly.

- See footnotes for the battery groups in the "Technical data" chapter.
- At the end of this charging process, the displayed charge state may remain between 90 and 98% for an extended period. The displayed value may increase by large increments at a time, rather than increasing gradually.

  The charging process is then ended as usual (see the operating instructions for the battery charger). Charging can be interrupted at any time and the battery can be used as normal.

Prerequisites

The industrial truck is switched off or the battery has been removed.

Instructions

1 Switch on the battery charger
2 Observe the display on the battery charger
3 Connect the battery to the battery charger

The charging process starts automatically. The battery charger indicates when the battery is fully charged. Only disconnect the battery from the charger if no current is flowing.

NOTE

The battery has no memory effect. For this reason, the battery can be charged in any charge state without the nominal capacity of the battery being impaired.

- *At ambient temperatures below 0°C, the charging process will take much longer.*

Switching off the battery

The battery cannot be switched off manually. The battery switches off automatically (quiescent state) when it no longer receives a signal from the industrial truck or the battery charger.

Correcting battery faults

X-Line

Fault	Course of action
The battery is not functioning or is supplying too little power	Switch off the industrial truck. Check the display on the battery. If no error is displayed, restart the industrial truck after ten seconds.
The temperature LED is illuminated or is flashing	Allow the battery to cool down. If this occurs frequently, contact the authorised service centre.
The service LED is illuminated	Contact the authorised service centre

C-Line

Fault	Course of action
The battery is not functioning or is supplying too little power	Switch off the industrial truck. Check the display on the battery. If no error is displayed, restart the industrial truck after ten seconds.
The battery still does not work	Contact the authorised service centre

NOTE

There are no parts in or on the battery that must be maintained or replaced by the user.

- *If you have any questions or problems, contact the authorised service centre.*
- *Do not have the battery repaired or replaced by an unauthorised service centre or by unauthorised personnel.*

Transporting the lithium-ion battery

General

All lithium-ion batteries are safe when used for their intended purpose. In principle, they do have the potential to cause a fire, explosion or chemical irritation.

Safety information for transporting the battery outside the industrial truck

All lithium-ion batteries are classified as hazardous goods.

Special precautions must be taken when transporting these batteries outside an industrial truck.

When transporting the battery on a pallet (1), the load capacity of the pallet must be greater than the weight of the battery and the transportation packaging. The battery must be properly secured and friction-locked to the pallet. For this purpose, anti-slip mats must be placed between the battery and pallet. The battery must be lashed to the pallet in all directions using tension belts. The tension belts must not press on the battery male connector. When transporting the battery on a loading surface, the battery must be held in position with friction-locked load-securing equipment. The load-securing equipment must comply with the latest technological standards and the requirements applicable to carriage of hazardous goods. The hazardous goods label with the hazardous goods class 9 A symbol must be attached in a visible position on the battery packaging (2).

A hazardous goods label must be attached to the transport vehicle.

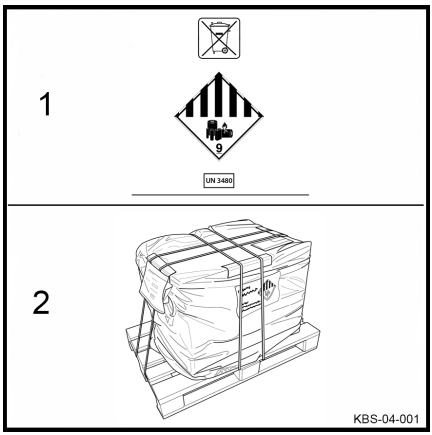

NOTE

The current country-specific specifications and regulations must be observed when transporting lithium-ion batteries in and outside of an industrial truck. The Carriage of Hazardous Goods Act, the Ordinance on the Transport of Dangerous Goods and the ADR regulations set out specific requirements that apply to the dispatcher's client, the dispatcher, the packer, the loading agent, the carrier, the driver, the unloader, the unpacker and the receiver.

Safety information for transporting the industrial truck with a built-in battery

An industrial truck with a built-in lithium-ion battery must be transported in accordance with national legal requirements.

Safety information for transporting the battery by crane

National legal requirements must be complied with when transporting the lithium-ion battery by crane.

Safety information

DANGER

Risk of fatal injury from falling load

- Never step under an elevated load.
- Observe the load capacity of the crane. Also establish the weight of the battery (identification plate).

CAUTION

Risk of crushing/shearing

There is a risk of crushing or shearing when removing or inserting the battery by crane.

- Do not stand directly next to the battery or between the battery and the crane.

To avoid short circuits, batteries with open terminals or connections must be covered with a rubber mat.

Detecting potential damage to the battery

The battery is considered damaged in the following scenarios:

- The battery cover shows damage that could impair the leak tightness of the battery
- The battery housing is severely damaged (visible deformation of the housing)
- The display of the industrial truck shows the message that prompts the drive to contact the authorised service centre
- The battery can no longer be activated

When a defect or damage is identified, prior use and improper use must be taken into account.

For example, improper use includes the battery being inverted. The battery must be checked by the authorised service centre.

NOTE

Special measures must be taken when transporting damaged lithium-ion batteries. The defective battery must be marked as hazardous goods in accordance with the specific requirements of the ADR. The operator's hazardous goods officer and the authorised service centre must arrange this together. The defective battery must be packed, transported and handed over to the qualified service provider in line with the applicable regulations.

- *Contact the authorised service centre for more information.*

5

Maintenance

Maintaining the battery

Maintaining the operational readiness of the battery

Performing the maintenance tasks listed here will increase the service life of the battery. This will help to maintain the operational readiness of the battery. The frequency of the work must correspond to the application conditions.

- Clean the battery
- Visually inspect the connections and cables on the battery to ensure that they are all present and in the correct condition
- Visually inspect the covers
- Charge the battery
- **Fully** charge the battery every three months

Batteries in some battery groups must be fully charged once per week. This is necessary to ensure that the charge state is displayed correctly.

- See footnotes for the battery groups in the "Technical data" chapter.
- At the end of this charging process, the displayed charge state may remain between 90 and 98% for an extended period. The displayed value may increase by large increments at a time, rather than increasing gradually.

  The charging process is then ended as usual (see the operating instructions for the battery charger). Charging can be interrupted at any time and the battery can be used as normal.

Maintenance tasks

NOTE

This maintenance work may be performed only by qualified and authorised personnel. Specialist knowledge and special tools are required.

- *Contact the authorised service centre.*

The test result must be recorded in the maintenance checklist of the industrial truck.

Maintenance and inspection checklist

At operating hours										Carried out	
1000		Jährlich								✓	✗
Battery											
Visually inspect the item for damage											
Carry out an isolation measurement											
Battery male connector, contacts and battery cable											
Visually inspect the item for damage											
Terminal screws											
Check that the item is securely fitted											
Signs and adhesive labels											
Visual inspect the item for completeness and damage											

Cleaning the battery

⚠ CAUTION

Aggressive cleaning materials can damage the surfaces of components!

Aggressive cleaning materials that are not suitable for plastics can cause plastic parts to dissolve or become brittle. The screen on the display-operating unit (if present) could become cloudy.

– Clean plastics only with cleaning materials intended for plastics.

– Observe the manufacturer's guidelines for working with cleaning materials.

⚠ WARNING

Risk of fire due to flammable cleaning materials!

Flammable cleaning materials can be ignited by hot components.

– Do not use any flammable cleaning materials.

Clean the battery only outside the industrial truck. To remove the battery, refer to the operating instructions for the industrial truck.

The best medium for cleaning the battery is oil-free compressed air.

If the outside of the battery is very dirty, an electrical contact cleaner can be used for

cleaning. The electrical contact cleaner must meet the following requirements:

- A dielectric strength of 100,000 V/cm according to DIN 57370
- Free of hydrocarbons such as CHCs, CFCs, aromatics, PCBs, PCTs and other pollutants.

X-Line

If the outside of the battery is very dirty, a high-pressure cleaner can be used with great care. The high-pressure cleaner may be used only with water without any chemical cleaning additives. Cleaning additives can damage plastic parts and seals.

Do not aim the cleaning jet directly at adhesive labels, decal information or the battery male connector.

When using a high-pressure cleaner, the following limit values must not be exceeded:

- Pressure of max. 140 bar
- Distance of min. 1 m
- Temperature of max. 60 °C

NOTE

If it is determined during service work that moisture has penetrated the battery, the warranty will terminate.

C-Line

The battery is not protected against water and must not be cleaned with water. During cleaning, make sure that no moisture enters the housing. This could cause safety-related components to malfunctions.

NOTE

If it is determined during service work that moisture has penetrated the battery, the warranty will terminate.

Transporting and storing the battery on company premises

Safety regulations

Observe the operating instructions for the industrial truck when removing the battery.

Visual inspection before lifting

Before lifting the battery, check on the outside of the battery that:

- All components are present
- All markings and adhesive labels are complete
- The tray or cover is not damaged
- There is no damage to the lifting eyes

The lifting eyes must be checked for the following:

- Corrosion
- Necking
- Breaks
- Tears
- Bends

Crane eyes when lifting

When lifting the battery, suitable battery lifting gears must be used. The load capacity of the lifting gear must be greater than the weight of the load to be lifted.

To prevent the battery tray (1) from being compressed, the lifting gear (2) must lift by pulling vertically.

▷

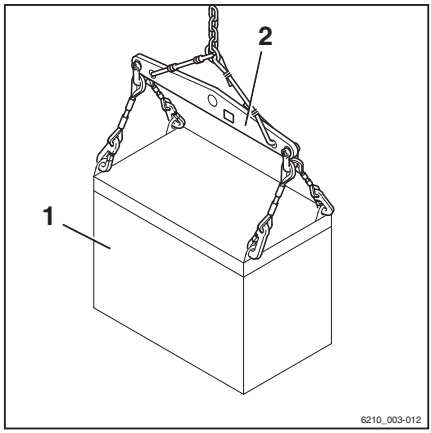

Observe the maximum tilt for the lifting eyes. ▷

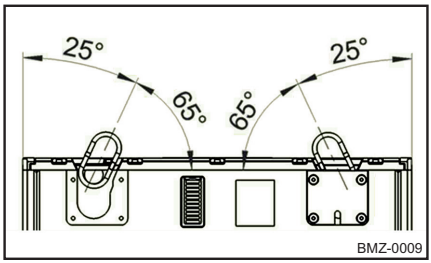

Storage conditions

Battery charge state

– Charge the battery before storage.

– Keep the charge state of stored batteries above 50%.

– Regularly check the charge state of the battery, at least every three months. Charge the battery if necessary.

If the truck has been stationary for an extended period or if the battery has been stored for more than two weeks:

- The battery must be fully charged once to ensure that its charge state is displayed correctly.

⚠ CAUTION

A battery with an extremely low charge state cannot be charged. Deep discharging has a negative effect on the service life of the battery cells and can destroy the cells.

– Avoid deep discharging the battery.

– If the battery has been deep discharged, contact the authorised service centre.

Storage period

The battery must be checked on a regular basis and recharged if necessary. The battery self-discharges slowly due to permanent safety monitoring. Self-discharge takes several weeks, depending on the nominal capacity of the battery.

Floor load capacity

Take the battery weight and the floor load capacity into consideration.

X-Line storage environment

– Only store the battery within the permissible temperature range; see temperature ranges in the chapter entitled "Technical data" for the respective battery group.

NOTE

Long-term storage below -10°C or above 40°C has a negative impact on the service life of the battery. A temperature of between 15°C and 30°C is ideal.

Ensure that the storage area is well ventilated (air humidity 0% to 80%).

C-Line storage environment

Always store the battery under cover and in a dry place that is protected from sunlight. Observe the decal information (1) on the transport packaging of the battery.

▷ 1

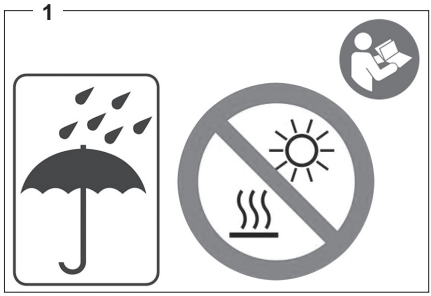

Only store the battery within the permissible temperature range; see temperature ranges in the chapter entitled "Technical data" for the respective battery group. A temperature of between 15°C and 30°C is ideal.

NOTE

Long-term storage below -10°C or above 40°C reduces the service life of the battery. A temperature of between 15°C and 30°C is ideal.

Ensure that the storage area is well ventilated (air humidity 5% to 85%).

Damaged batteries

– Store damaged batteries separately (see the section entitled "Detecting potential damage to the battery"). If possible, store damaged batteries outside buildings with a distance of at least 5 m from the nearest building wall.

Transporting and storing the battery on company premises

- Cover the battery so that it is impervious to liquids.
- The battery must not be charged any more. Do not continue to use the battery in the industrial truck.
- Further course of action regarding the damaged battery must be agreed with the authorised service centre.

Disposing of the battery

Statutory provisions regarding safety

The user is legally obliged to return used batteries. Returning the batteries is free of charge. If lithium-ion batteries are not disposed of correctly, damage to health may occur due to fire or hazardous substances escaping.

Return

Please contact the authorised service centre when a battery reaches the end of its service life. The battery must be disassembled and disposed of in accordance with the latest technological standards and legal regulations.

Environment

The manufacturer will arrange for the battery to be recycled. During the recycling process, valuable raw materials are recycled and hazardous substances are disposed of in the correct manner. Returning the battery represents a significant contribution to protecting the environment.

6

Technical data

Datasheet for lithium-ion batteries

NOTE

To identify the battery in the tables, see the chapter entitled "Identifying the Battery".

The capacity (kWh) specified for the batteries is the minimum level. The actual capacity of the battery may be higher.

Battery group 1

Battery group	Installed Energy (kWh)	Available Energy (kWh)	Weight (kg)	Dimension (mm)
X-Line				
1.1	13,1	12,0	708	830 / 522 / 627
1.2	39,2	36,1	708	803 / 522 / 627
1.3	26,1	24,0	708	803 / 522 / 627
1.4	17,2	13,7	708	803 / 522 / 627
1.5	28,6	22,9	708	803 / 522 / 627
1.6	51,5	41,2	708	803 / 522 / 627
1.11 [1) 2)]	17,7	15,9	708	830 / 522 / 627
1.12 [1) 2)]	26,5	23,8	708	830 / 522 / 627
1.13 [1) 2)]	44,2	39,7	708	830 / 522 / 627
C-Line				
1.7 [1)]	19,3	15,4	732	827 / 497 / 600

1) The temperature range for use and the usable energy may be restricted depending on the use of the industrial truck.

2) The battery must be fully charged once per week. This is necessary to ensure that the charge state is displayed correctly.

Battery group 2

Battery group	Installed Energy (kWh)	Available Energy (kWh)	Weight (kg)	Dimension (mm)
X-Line				
2.0	13,1	12,0	856	1030 / 529 / 627
2.1	13,1	12,0	856	1030 / 529 / 627
2.2	49,0	45,1	856	1030 / 529 / 627
2.3	26,1	24,0	856	1030 / 529 / 627
2.4	17,2	13,7	856	1030 / 529 / 627
2.5	28,6	22,9	856	1030 / 529 / 627
2.6	51,4	41,2	856	1030 / 529 / 627
2.11 [1) 2)]	17,7	15,9	856	1030 / 529 / 627
2.12 [1) 2)]	26,5	23,8	856	1030 / 529 / 627
2.13 [1) 2)]	44,2	39,7	856	1030 / 529 / 627
C-Line				
2.7 [1)]	19,3	15,4	839	1030 / 529 / 627

1) The temperature range for use and the usable energy may be restricted depending on the use of the industrial truck.

2) The battery must be fully charged once per week. This is necessary to ensure that the charge state is displayed correctly.

Battery group 3

Battery group	Installed Energy (kWh)	Available Energy (kWh)	Weight (kg)	Dimension (mm)
X-Line				
3.1	16,3	15,0	856	830 / 630 / 627
3.2	45,7	42,1	856	830 / 630 / 627
3.3	26,1	24,0	856	830 / 630 / 627
3.4	17,2	13,7	856	830 / 630 / 627
3.5	28,6	22,9	856	830 / 630 / 627
3.6	51,4	41,2	856	830 / 630 / 627
3.11 [1) 2)]	17,7	15,9	856	830 / 630 / 627
3.12 [1) 2)]	26,5	23,8	856	830 / 630 / 627
3.13 [1) 2)]	44,2	39,7	856	830 / 630 / 627
C-Line				
3.7 [1)]	19,3	15,4	840	1030 / 529 / 627

1) The temperature range for use and the usable energy may be restricted depending on the use of the industrial truck.

2) The battery must be fully charged once per week. This is necessary to ensure that the charge state is displayed correctly.

Battery group 4

Battery group	Installed Energy (kWh)	Available Energy (kWh)	Weight (kg)	Dimension (mm)
X-Line				
4.1	9,8	9,0	750	1223 / 283 / 784
4.2	39,2	36,1	939	1223 / 355 / 784
4.3	39,2	36,1	1119	1223 / 385 / 784
4.4	26,1	24,0	1119	1223 / 385 / 742

Battery group 5

Battery group	Installed Energy (kWh)	Available Energy (kWh)	Weight (kg)	Dimension (mm)
X-Line				
5.1	24,1	22,2	1210	1028 / 708 / 627
5.2	60,3	55,6	1210	1028 / 708 / 627
5.3	83,0	76,4	1210	1028 / 708 / 627
5.4	42,2	38,8	1210	1028 / 708 / 627
5.5	31,5	25,4	1210	1028 / 708 / 627
5.6	52,8	42,3	1210	1028 / 708 / 627
5.7	95,1	76,1	1210	1028 / 708 / 627
5.11 [1) 2)]	33,0	29,7	1210	1028 / 708 / 627
5.12 [1) 2)]	49,5	44,5	1210	1028 / 708 / 627
5.13 [1) 2)]	65,9	59,4	1210	1028 / 708 / 627
5.14 [1) 2)]	82,4	74,2	1210	1028 / 708 / 627

1) The temperature range for use and the usable energy may be restricted depending on the use of the industrial truck.

2) The battery must be fully charged once per week. This is necessary to ensure that the charge state is displayed correctly.

Battery group 6

Battery group	Installed Energy (kWh)	Available Energy (kWh)	Weight (kg)	Dimension (mm)
X-Line				
6.1	24,1	22,2	1558	1028 / 711 / 687
6.2	60,3	55,5	1558	1028 / 711 / 687
6.3	83,0	76,4	1558	1028 / 711 / 687
6.4	42,2	38,8	1558	1028 / 711 / 687
6.5	31,5	25,4	1558	1028 / 711 / 687
6.6	52,8	42,3	1558	1028 / 711 / 687
6.7	95,1	76,1	1558	1028 / 711 / 687
6.11 [1) 2)]	33,0	29,7	1558	1028 / 711 / 692
6.12 [1) 2)]	49,5	44,5	1558	1028 / 711 / 692
6.13 [1) 2)]	65,9	59,4	1558	1028 / 711 / 692
6.14 [1) 2)]	82,4	74,2	1558	1028 / 711 / 692

1) The temperature range for use and the usable energy may be restricted depending on the use of the industrial truck.

2) The battery must be fully charged once per week. This is necessary to ensure that the charge state is displayed correctly.

Battery group 7

Battery group	Installed Energy (kWh)	Available Energy (kWh)	Weight (kg)	Dimension (mm)
X-Line				
7.1 [1]	36,2	33,3	2178	1028 / 999 / 720
7.2 [1]	116,2	106,9	2178	1028 / 999 / 720
7.2 [2] [3]	116,2	95,3	2178	1028 / 999 / 720
7.3 [1]	66,3	61,0	2178	1028 / 999 / 720
7.4 [2] [3]	74,7	57,5	2178	1028 / 999 / 720
7.5 [1]	42,3	33,8	2178	1028 / 999 / 720
7.6 [1]	74,0	59,2	2178	1028 / 999 / 720
7.7 [1]	126,8	101,5	2178	1028 / 999 / 720
7.8 [2] [3]	84,6	63,4	2178	1028 / 999 / 720
7.9 [2] [3]	126,8	95,1	2178	1028 / 999 / 720
7.11 [1] [4]	41,2	37,1	2178	1028 / 999 / 724
7.12 [1] [4]	65,9	59,4	2178	1028 / 999 / 724
7.13 [1] [4]	115,4	103,9	2178	1028 / 999 / 724
7.14 [2] [3] [4]	74,2	66,8	2178	1028 / 999 / 724
7.15 [2] [3] [4]	115,4	103,9	2178	1028 / 999 / 724

[1] Installation is permitted only in industrial trucks with a nominal load of <= 4,5t

[2] Installation is permitted only in industrial trucks with a nominal load of > 4,5t

[3] The temperature range for use and the usable energy may be restricted depending on the use of the industrial truck.

[4] The battery must be fully charged once per week. This is necessary to ensure that the charge state is displayed correctly.

Battery group 8

Battery group	Installed Energy (kWh)	Available Energy (kWh)	Weight (kg)	Dimension (mm)
X-Line				
8.1	16,3	15,0	856	830 / 630 / 627
8.2	45,7	42,1	856	830 / 630 / 627
8.3	26,1	24,0	856	830 / 630 / 627

Battery group 9

Battery group	Installed Energy (kWh)	Available Energy (kWh)	Weight (kg)	Dimension (mm)
X-Line				
9.1	16,3	15,0	1013	830 / 738 / 627
9.2	49,0	45,1	1013	830 / 738 / 627
9.3	26,1	24,0	1013	830 / 738 / 627
9.4	17,2	13,7	1013	830 / 738 / 627
9.5	28,6	22,9	1013	830 / 738 / 627
9.6	51,5	41,2	1013	830 / 738 / 627
9.11 [1) 2)]	17,7	15,9	1013	830 / 738 / 627
9.12 [1) 2)]	26,5	23,8	1013	830 / 738 / 627
9.13 [1) 2)]	44,2	39,7	1013	830 / 738 / 627

1) The temperature range for use and the usable energy may be restricted depending on the use of the industrial truck.

2) The battery must be fully charged once per week. This is necessary to ensure that the charge state is displayed correctly.

Battery group 10

Battery group	Installed Energy (kWh)	Available Energy (kWh)	Weight (kg)	Dimension (mm)
X-Line				
10.6	74,0	59,2	1458	1028 / 852 / 635
10.7	126,8	101,5	1458	1028 / 852 / 635
10.12 [1) 2)]	65,9	59,4	1458	1028 / 852 / 635
10.13 [1) 2)]	98,9	89,0	1458	1028 / 852 / 635

1) The temperature range for use and the usable energy may be restricted depending on the use of the industrial truck.
2) The battery must be fully charged once per week. This is necessary to ensure that the charge state is displayed correctly.

Battery group 11

Battery group	Installed Energy (kWh)	Available Energy (kWh)	Weight (kg)	Dimension (mm)
X-Line				
11.6	42,3	33,8	1238	1028 / 567 / 784
11.12 [1) 2)]	33,0	29,7	1238	1028 / 567 / 784

1) The temperature range for use and the usable energy may be restricted depending on the use of the industrial truck.
2) The battery must be fully charged once per week. This is necessary to ensure that the charge state is displayed correctly.

Battery group 13

Battery group	Installed Energy (kWh)	Available Energy (kWh)	Weight (kg)	Dimension (mm)
X-Line				
13.1	17,2	13,7	750	1223 / 283 / 742
13.11 [1) 2)]	13,2	11,9	750	1223 / 283 / 742

1) The temperature range for use and the usable energy may be restricted depending on the use of the industrial truck.

2) The battery must be fully charged once per week. This is necessary to ensure that the charge state is displayed correctly.

Battery group 14

Battery group	Installed Energy (kWh)	Available Energy (kWh)	Weight (kg)	Dimension (mm)
X-Line				
14.1	28,6	22,9	939	1223 / 355 / 742
14.2	40,1	32,1	939	1223 / 355 / 742
14.11 [1) 2)]	26,5	23,8	939	1223 / 355 / 742
14.12 [1) 2)]	35,3	31,8	939	1223 / 355 / 742
C-Line				
14.3 [1)]	19,3	15,4	934	1217 / 349 / 781

1) The temperature range for use and the usable energy may be restricted depending on the use of the industrial truck.

2) The battery must be fully charged once per week. This is necessary to ensure that the charge state is displayed correctly.

Battery group 15

Battery group	Installed Energy (kWh)	Available Energy (kWh)	Weight (kg)	Dimension (mm)
X-Line				
15.1	28,6	22,9	1119	1223 / 385 / 742
15.2	40,1	32,1	1119	1223 / 385 / 742
15.11 [1) 2)]	26,5	23,8	1119	1223 / 385 / 742
15.12 [1) 2)]	35,3	31,8	1119	1223 / 385 / 742

1) The temperature range for use and the usable energy may be restricted depending on the use of the industrial truck.

2) The battery must be fully charged once per week. This is necessary to ensure that the charge state is displayed correctly.

Temperature ranges for lithium-ion batteries

NOTE

To identify the battery in the tables, see the chapter entitled "Identifying the Battery".

Battery group 1

Battery group	Installed Energy (kWh)	Temperature ranges		
		Operation	Charging	Storage
X-Line				
1.1	13,1	-28°C...+45°C	-25°C...+45°C	-35°C...+60°C
1.2	39,2	-28°C...+45°C	-25°C...+45°C	-35°C...+60°C
1.3	26,1	-28°C...+45°C	-25°C...+45°C	-35°C...+60°C
1.4	17,2	-28°C...+45°C	-25°C...+45°C	-35°C...+60°C
1.5	28,6	-28°C...+45°C	-25°C...+45°C	-35°C...+60°C
1.6	51,5	-28°C...+45°C	-25°C...+45°C	-35°C...+60°C
1.11	17,7	-10°C...+45°C [1)]	-10°C...+45°C [1) 2)]	-35°C...+60°C
1.12	26,5	-10°C...+45°C [1)]	-10°C...+45°C [1) 2)]	-35°C...+60°C
1.13	44,2	-10°C...+45°C [1)]	-10°C...+45°C [1) 2)]	-35°C...+60°C
C-Line				
1.7	19,3	+5°C...+45°C	+5°C...+45°C	< 1 month: -40°C...+45°C > 6 months: -20°C...35°C

1) Full performance at negative temperatures requires low-temperature protection.

2) Full charging performance between 0°C...+30°C. Further limitation by charger possible.

Battery group 2

Battery group	Installed Energy (kWh)	Temperature ranges		
		Operation	Charging	Storage
X-Line				
2.0	13,1	-28°C...+45°C	-25°C...+45°C	-35°C...+60°C
2.1	13,1	-28°C...+45°C	-25°C...+45°C	-35°C...+60°C
2.2	49,0	-28°C...+45°C	-25°C...+45°C	-35°C...+60°C
2.3	26,1	-28°C...+45°C	-25°C...+45°C	-35°C...+60°C
2.4	17,2	-28°C...+45°C	-25°C...+45°C	-35°C...+60°C
2.5	28,6	-28°C...+45°C	-25°C...+45°C	-35°C...+60°C
2.6	51,4	-28°C...+45°C	-25°C...+45°C	-35°C...+60°C
2.11	17,7	-10°C...+45°C [1)]	-10°C...+45°C [1) 2)]	-35°C...+60°C
2.12	26,5	-10°C...+45°C [1)]	-10°C...+45°C [1) 2)]	-35°C...+60°C
2.13	44,2	-10°C...+45°C [1)]	-10°C...+45°C [1) 2)]	-35°C...+60°C
C-Line				
2.7	19,3	+5°C...+45°C	+5°C...+45°C	< 1 month: -40°C...+45°C > 6 months: -20°C...35°C

[1)] Full performance at negative temperatures requires low-temperature protection.

[2)] Full charging performance between 0°C...+30°C. Further limitation by charger possible.

Battery group 3

Battery group	Installed Energy (kWh)	Temperature ranges		
		Operation	Charging	Storage
X-Line				
3.1	16,3	-28°C...+45°C	-25°C...+45°C	-35°C...+60°C
3.2	45,7	-28°C...+45°C	-25°C...+45°C	-35°C...+60°C
3.3	26,1	-28°C...+45°C	-25°C...+45°C	-35°C...+60°C
3.4	17,2	-28°C...+45°C	-25°C...+45°C	-35°C...+60°C
3.5	28,6	-28°C...+45°C	-25°C...+45°C	-35°C...+60°C
3.6	51,4	-28°C...+45°C	-25°C...+45°C	-35°C...+60°C
3.11	17,7	-10°C...+45°C [1)]	-10°C...+45°C [1) 2)]	-35°C...+60°C
3.12	26,5	-10°C...+45°C [1)]	-10°C...+45°C [1) 2)]	-35°C...+60°C
3.13	44,2	-10°C...+45°C [1)]	-10°C...+45°C [1) 2)]	-35°C...+60°C
C-Line				
3.7	19,3	+5°C...+45°C	+5°C...+45°C	< 1 month: -40°C...+45°C > 6 months: -20°C...35°C

1) Full performance at negative temperatures requires low-temperature protection.
2) Full charging performance between 0°C...+30°C. Further limitation by charger possible.

Battery group 4

Battery group	Installed Energy (kWh)	Temperature ranges		
		Operation	Charging	Storage
X-Line				
4.1	9,8	-28°C...+45°C	-25°C...+45°C	-35°C...+60°C
4.2	39,2	-28°C...+45°C	-25°C...+45°C	-35°C...+60°C
4.3	39,2	-28°C...+45°C	-25°C...+45°C	-35°C...+60°C
4.4	26,1	-28°C...+45°C	-25°C...+45°C	-35°C...+60°C

Battery group 5

Battery group	Installed Energy (kWh)	Temperature ranges		
		Operation	Charging	Storage
X-Line				
5.1	24,1	-28°C...+45°C	-25°C...+45°C	-35°C...+60°C
5.2	60,3	-28°C...+45°C	-25°C...+45°C	-35°C...+60°C
5.3	83,0	-28°C...+45°C	-25°C...+45°C	-35°C...+60°C
5.4	42,2	-28°C...+45°C	-25°C...+45°C	-35°C...+60°C
5.5	31,5	-28°C...+45°C	-25°C...+45°C	-35°C...+60°C
5.6	52,8	-28°C...+45°C	-25°C...+45°C	-35°C...+60°C
5.7	95,1	-28°C...+45°C	-25°C...+45°C	-35°C...+60°C
5.11	33,0	-10°C...+45°C [1)]	-10°C...+45°C [1) 2)]	-35°C...+60°C
5.12	49,5	-10°C...+45°C [1)]	-10°C...+45°C [1) 2)]	-35°C...+60°C
5.13	65,9	-10°C...+45°C [1)]	-10°C...+45°C [1) 2)]	-35°C...+60°C
5.14	82,4	-10°C...+45°C [1)]	-10°C...+45°C [1) 2)]	-35°C...+60°C

1) Full performance at negative temperatures requires low-temperature protection.

2) Full charging performance between 0°C...+30°C. Further limitation by charger possible.

Battery group 6

Battery group	Installed Energy (kWh)	Temperature ranges		
		Operation	Charging	Storage
X-Line				
6.1	24,1	-28°C...+45°C	-25°C...+45°C	-35°C...+60°C
6.2	60,3	-28°C...+45°C	-25°C...+45°C	-35°C...+60°C
6.3	83,0	-28°C...+45°C	-25°C...+45°C	-35°C...+60°C
6.4	42,2	-28°C...+45°C	-25°C...+45°C	-35°C...+60°C
6.5	31,5	-28°C...+45°C	-25°C...+45°C	-35°C...+60°C
6.6	52,8	-28°C...+45°C	-25°C...+45°C	-35°C...+60°C
6.7	95,1	-28°C...+45°C	-25°C...+45°C	-35°C...+60°C
6.11	33,0	-10°C...+45°C [1)]	-10°C...+45°C [1) 2)]	-35°C...+60°C
6.12	49,5	-10°C...+45°C [1)]	-10°C...+45°C [1) 2)]	-35°C...+60°C
6.13	65,9	-10°C...+45°C [1)]	-10°C...+45°C [1) 2)]	-35°C...+60°C
6.14	82,4	-10°C...+45°C [1)]	-10°C...+45°C [1) 2)]	-35°C...+60°C

1) Full performance at negative temperatures requires low-temperature protection.

2) Full charging performance between 0°C...+30°C. Further limitation by charger possible.

Battery group 7

Battery group	Installed Energy (kWh)	Temperature ranges		
		Operation	Charging	Storage
X-Line				
7.1	36,2	-28°C...+45°C	-25°C...+45°C	-35°C...+60°C
7.2	116,2	-28°C...+45°C	-25°C...+45°C	-35°C...+60°C
7.2	116,2	-28°C...+45°C	-25°C...+45°C	-35°C...+60°C
7.3	66,3	-28°C...+45°C	-25°C...+45°C	-35°C...+60°C
7.4	74,7	-28°C...+45°C	-25°C...+45°C	-35°C...+60°C
7.5	42,3	-28°C...+45°C	-25°C...+45°C	-35°C...+60°C
7.6	74,0	-28°C...+45°C	-25°C...+45°C	-35°C...+60°C
7.7	126,8	-28°C...+45°C	-25°C...+45°C	-35°C...+60°C
7.8	84,6	-28°C...+45°C	-25°C...+45°C	-35°C...+60°C
7.9	126,8	-28°C...+45°C	-25°C...+45°C	-35°C...+60°C
7.11	41,2	-10°C...+45°C [1)]	-10°C...+45°C [1) 2)]	-35°C...+60°C
7.12	65,9	-10°C...+45°C [1)]	-10°C...+45°C [1) 2)]	-35°C...+60°C
7.13	115,4	-10°C...+45°C [1)]	-10°C...+45°C [1) 2)]	-35°C...+60°C
7.14	74,2	-10°C...+45°C [1)]	-10°C...+45°C [1) 2)]	-35°C...+60°C
7.15	115,4	-10°C...+45°C [1)]	-10°C...+45°C [1) 2)]	-35°C...+60°C

1) Full performance at negative temperatures requires low-temperature protection.
2) Full charging performance between 0°C...+30°C. Further limitation by charger possible.

Battery group 8

Battery group	Installed Energy (kWh)	Temperature ranges		
		Operation	Charging	Storage
X-Line				
8.1	16,3	-28°C...+45°C	-25°C...+45°C	-35°C...+60°C
8.2	45,7	-28°C...+45°C	-25°C...+45°C	-35°C...+60°C
8.3	26,1	-28°C...+45°C	-25°C...+45°C	-35°C...+60°C

Battery group 9

Battery group	Installed Energy (kWh)	Temperature ranges		
		Operation	Charging	Storage
X-Line				
9.1	16,3	-28°C...+45°C	-25°C...+45°C	-35°C...+60°C
9.2	49,0	-28°C...+45°C	-25°C...+45°C	-35°C...+60°C
9.3	26,1	-28°C...+45°C	-25°C...+45°C	-35°C...+60°C
9.4	17,2	-28°C...+45°C	-25°C...+45°C	-35°C...+60°C
9.5	28,6	-28°C...+45°C	-25°C...+45°C	-35°C...+60°C
9.6	51,5	-28°C...+45°C	-25°C...+45°C	-35°C...+60°C
9.11	17,7	-10°C...+45°C [1)]	-10°C...+45°C [1) 2)]	-35°C...+60°C
9.12	26,5	-10°C...+45°C [1)]	-10°C...+45°C [1) 2)]	-35°C...+60°C
9.13	44,2	-10°C...+45°C [1)]	-10°C...+45°C [1) 2)]	-35°C...+60°C

1) Full performance at negative temperatures requires low-temperature protection.
2) Full charging performance between 0°C...+30°C. Further limitation by charger possible.

Battery group 10

Battery group	Installed Energy (kWh)	Temperature ranges		
		Operation	Charging	Storage
X-Line				
10.6	74,0	-28°C...+45°C	-25°C...+45°C	-35°C...+60°C
10.7	126,8	-28°C...+45°C	-25°C...+45°C	-35°C...+60°C
10.12	65,9	-10°C...+45°C [1)]	-10°C...+45°C [1) 2)]	-35°C...+60°C
10.13	98,9	-10°C...+45°C [1)]	-10°C...+45°C [1) 2)]	-35°C...+60°C

1) Full performance at negative temperatures requires low-temperature protection.
2) Full charging performance between 0°C...+30°C. Further limitation by charger possible.

Battery group 11

Battery group	Installed Energy (kWh)	Temperature ranges		
		Operation	Charging	Storage
X-Line				
11.6	42,3	-28°C...+45°C	-25°C...+45°C	-35°C...+60°C
11.12	33,0	-10°C...+45°C [1]	-10°C...+45°C [1] [2]	-35°C...+60°C

[1] Full performance at negative temperatures requires low-temperature protection.
[2] Full charging performance between 0°C...+30°C. Further limitation by charger possible.

Battery group 13

Battery group	Installed Energy (kWh)	Temperature ranges		
		Operation	Charging	Storage
X-Line				
13.1	17,2	-28°C...+45°C	-25°C...+45°C	-35°C...+60°C
13.11	13,2	-10°C...+45°C [1]	-10°C...+45°C [1] [2]	-35°C...+60°C

[1] Full performance at negative temperatures requires low-temperature protection.
[2] Full charging performance between 0°C...+30°C. Further limitation by charger possible.

Battery group 14

Battery group	Installed Energy (kWh)	Temperature ranges		
		Operation	Charging	Storage
X-Line				
14.1	28,6	-28°C...+45°C	-25°C...+45°C	-35°C...+60°C
14.2	40,1	-28°C...+45°C	-25°C...+45°C	-35°C...+60°C
14.11	26,5	-10°C...+45°C [1)]	-10°C...+45°C [1) 2)]	-35°C...+60°C
14.12	35,3	-10°C...+45°C [1)]	-10°C...+45°C [1) 2)]	-35°C...+60°C
C-Line				
14.3	19,3	+5°C...+45°C	+5°C...+45°C	< 1 month: -40°C...+45°C > 6 months: -20°C...35°C

1) Full performance at negative temperatures requires low-temperature protection.
2) Full charging performance between 0°C...+30°C. Further limitation by charger possible.

Battery group 15

Battery group	Installed Energy (kWh)	Temperature ranges		
		Operation	Charging	Storage
X-Line				
15.1	28,6	-28°C...+45°C	-25°C...+45°C	-35°C...+60°C
15.2	40,1	-28°C...+45°C	-25°C...+45°C	-35°C...+60°C
15.11	26,5	-10°C...+45°C [1)]	-10°C...+45°C [1) 2)]	-35°C...+60°C
15.12	35,3	-10°C...+45°C [1)]	-10°C...+45°C [1) 2)]	-35°C...+60°C

1) Full performance at negative temperatures requires low-temperature protection.
2) Full charging performance between 0°C...+30°C. Further limitation by charger possible.

T

U

STILL GmbH

50988012301 EN - 06/2023 - 05